БП RA-2600

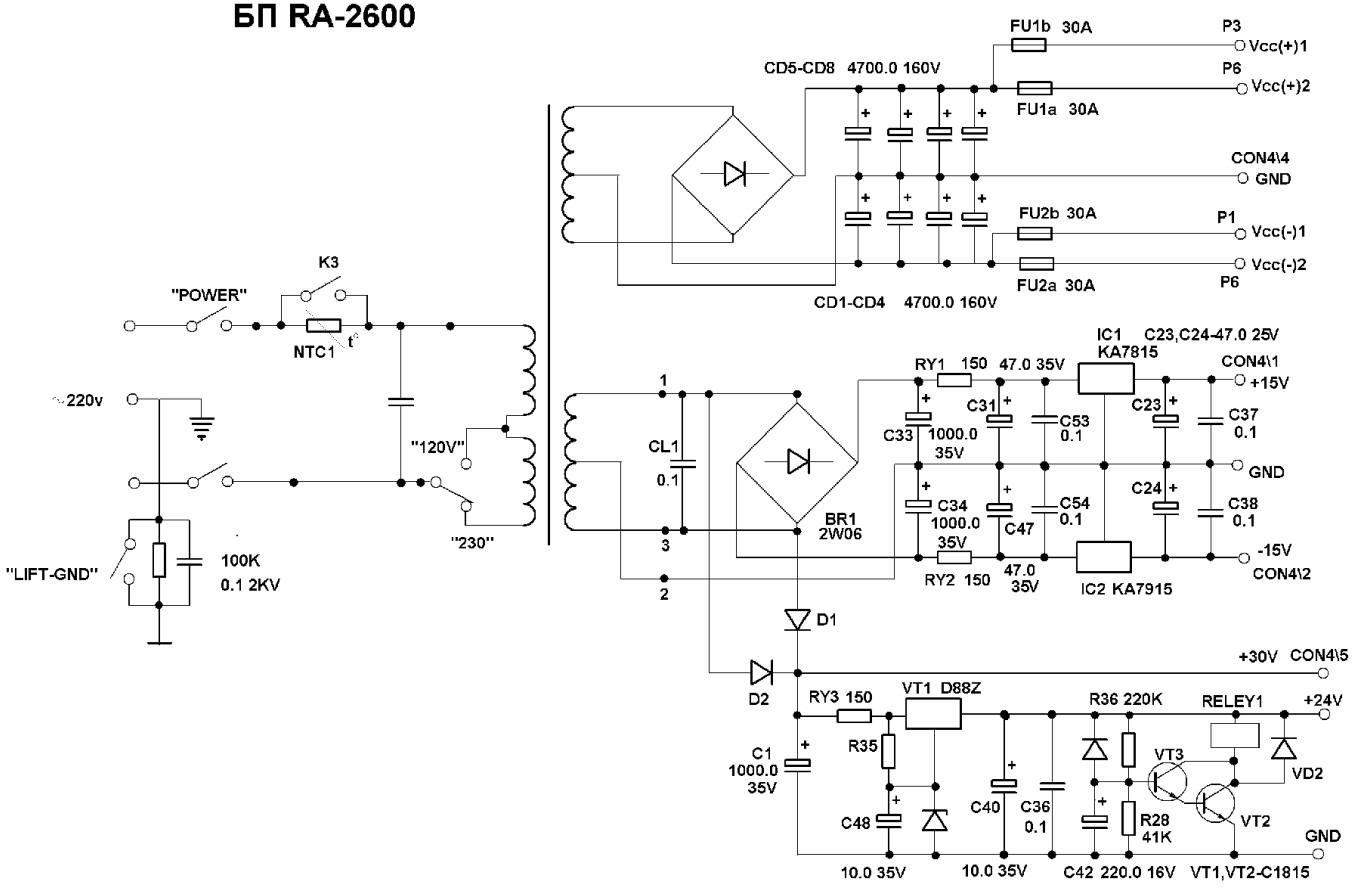
FU1b 30A
P3
Vcc(+)1
CD5-CD8 4700.0 160V
P6
Vcc(+)2
FU1a 30A
CON4\4
GND
FU2b 30A
P1
Vcc(-)1
Vcc(-)2
FU2a 30A
P6
CD1-CD4 4700.0 160V
K3
"POWER"
NTC1
t°
~220v
"120V"
"230"
"LIFT-GND"
100K
0.1 2KV
IC1 KA7815
C23,C24-47.0 25V
CON4\1
+15V
RY1 150
47.0 35V
C31
C53
0.1
C23
C37
0.1
C33 1000.0
35V
GND
CL1
0.1
C34
1000.0
35V
C47
C54
0.1
C24
C38
0.1
BR1
2W06
-15V
CON4\2
RY2 150
47.0
35V
IC2 KA7915
D1
+30V CON4\5
D2
RY3 150
VT1 D88Z
R36 220K
RELEY1
+24V
C1
1000.0
35V
R35
VT3
VD2
C48
C40
C36
0.1
R28
41K
VT2
GND
10.0 35V
10.0 35V
C42 220.0 16V
VT1,VT2-C1815